Kit E850S

© Copyright FAAC S.p.A. dal 2017. Tutti i diritti riservati.
Nessuna parte di questo manuale può essere riprodotta, archiviata, distrib
né altrimenti copiata, in qualsiasi formato e con qualsiasi mezzo, sia esso e
meccanico o tramite fotocopia, senza il preventivo consenso scritto di FAA
Tutti i nomi e i marchi citati sono di proprietà dei rispettivi fabbricanti.
I clienti possono effettuare copie per esclusivo utilizzo proprio.
Questo manuale è stato pubblicato nel 2017.

© Copyright FAAC S.p.A. from 2017. All rights reserved.
No part of this manual may be reproduced, archived, distributed to third
copied in any other way, in any format and with any means, be it electronic,
or by photocopying, without prior written authorisation by FAAC S.p.A.
All names and trademarks mentioned are the property of their respect
facturers.
Customers may make copies exclusively for their own use.
This manual was published in 2017.

© Copyright FAAC S.p.A. depuis 2017. Tous droits réservés.
Aucune partie de ce manuel ne peut être reproduite, archivée ou distribuée
ni copiée, sous tout format et avec tout moyen, qu'il soit électronique, mé
par photocopie, sans le consentement écrit préalable de FAAC S.p.A.
Tous les noms et les marques cités sont la propriété de leurs fabricants res
Les clients peuvent faire des copies pour leur usage exclusif.
Ce manuel a été publié en 2017.

© Copyright FAAC S.p.A. ab dem 2017. Alle Rechte vorbehalten.
Kein Teil dieses Handbuchs darf reproduziert, gespeichert, an Dritte weit
oder sonst auf eine beliebige Art in einem beliebigen Format und mit
Mitteln kopiert werden, weder mit elektronischen, noch mechanischen
Fotokopieren, ohne die Genehmigung von FAAC S.p.A.
Alle erwähnten Namen und Marken sind Eigentum der jeweiligen Herstel
Die Kunden dürfen nur für den Eigengebrauch Kopien anfertigen.
Dieses Handbuch wurde 2017 veröffentlicht.

© Copyright FAAC S.p.A. del 2017. Todos los derechos están reservados.
No puede reproducirse, archivarse, distribuirse a terceros ni copiarse de nin
ninguna parte de este manual, con medios mecánicos o mediante fotoc
permiso previo por escrito de FAAC S.p.A.
Todos los nombre y las marcas citadas son de propiedad de los respectivos f
Los clientes pueden realizar copias para su uso exclusivo.
Este manual se ha publicado en 2017.

© Copyright FAAC S.p.A. van 2017. Alle rechten voorbehouden.
Niets uit deze handleiding mag gereproduceerd, gearchiveerd, aan derden
gemaakt of op andere wijze gekopieerd worden, in om het even welk
met geen enkel middel, noch elektronisch, mechanisch of via fotokopiër
schrftelijke toestemming vooraf van FAAC S.p.A.

FAAC S.p.A. Soc. Unipersonale

CONTENTS

1. INTRODUCTION TO THE INSTRUCTION MANUAL 4
1.1 Meaning of the symbols used 4
1.2 Tools required 4

2. KIT E850S 5
2.1 Intended use 5
2.2 Unauthorised use 5
2.3 Technical characteristics 5
2.4 Component identification 5

3. PRELIMINARY OPERATIONS 7
3.1 Removing the cover 7
3.2 Disconnecting the electronic board E850 7
3.3 Removing the original frame 8
3.4 Disconnect the limit switches 8

4. INSTALLATION 9
4.1 Connecting the new limit switch cable 9
4.2 Connecting the new electric motor cable 9
4.3 Installing the new frame 10
4.4 Removing the plastic covers 10
4.5 Connections to the board E850S 11

5. START-UP 14
5.1 Manual operation 14
5.2 Limit switch adjustment 15
5.3 Programming 17

6. PUTTING INTO SERVICE 18
6.1 Final checks 18

7. DIAGNOSTICS 18
7.1 LEDs check 18
7.2 Status of the automation 18

EU DECLARATION OF CONFORMITY

The Manufacturer

Company name: FAAC S.p.A. Soc. Unipersonale

Address: Via Calari, 10 - 40069 Zola Predosa BOLOGNA -

hereby declares on his sole responsibility that the following products:

Description: The control board

Model: E850S

comply with the following applicable EU legislations:

2014/35/EU
2014/30/EU
2011/65/EU

Furthermore, the following harmonised standards have been applied:

EN 60335-1:2012 + A11:2014
EN61000-6-2:2005
EN61000-6-3:2007 + A1:2011

Bologna, Italy 20-03-2017 CEO

1. INTRODUCTION TO THE INSTRUCTION MANUAL

1.1 MEANING OF THE SYMBOLS USED

1 Symbols: notes and warnings on the instructions

	WARNING ELECTRIC SHOCK HAZARD - The procedure or step described must be carried out following the instructions provided and according to the applicable safety regulations
	WARNING, PERSONAL INJURY HAZARD OR RISK OF DAMAGE TO COMPONENTS - The procedure or step described must be carried out following the instructions provided and according to the applicable safety regulations.
	WARNING - Details and specifications that must be complied with in order to ensure that the system operates correctly.
	FIGURE E.g.: **1**-3 see Figure 1 - detail 3.
	TABLE E.g.: **1** see Table 1.
§	CHAPTER/SECTION E.g.: §1.1 see section 1.1.
	Automatic operation - automation locked
	Manual operation - automation unlocked

2 Symbols: safety signs and symbols (EN ISO 7010)

	GENERIC HAZARD Personal injury hazard or risk of damage to components
	ELECTROCUTION HAZARD Risk of electric shock from live parts
	CRUSHING HAZARD Risk of crushing of hands/feet due to the presence of heavy parts
	CUTTING/AMPUTATION/PIERCING HAZARD Cutting hazard due to the presence of sharp components or the use of pointed/sharp tools (drill)
	SHEARING HAZARD Risk of shearing due to moving parts
	RISK OF IMPACT/CRUSHING Risk of impact or crushing due to moving parts
	RISK OF TRIPPING Risk of tripping over due to the presence of thresholds higher than 5mm

3 Symbols: personal protective equipment

Personal protective equipment must be worn to protect against hazards (e.g. crushing, cutting, shearing etc.):

	Obligation to wear work gloves
	Obligation to wear safety footwear

1.2 TOOLS REQUIRED

Use appropriate tools and equipment in working environmen
comply with applicable legislation.

4 Symbols: work tools

 8 ; 19	HEX SPANNER of size indicated
	FLAT SCREWDRIVER
	PHILLIPS SCREWDRIVER
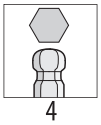 4	ALLEN KEY with ROUND HEAD of the size(s) indicated
	ELECTRICIAN'S SCISSORS
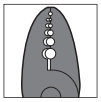	WIRE STRIPPER/TERMINAL CRIMPER

2. KIT E850S

2.1 INTENDED USE

The Kit is specifically for the FAAC C850 gearmotor.

The Kit allows you to replace the electronic board E850 and inverter with the electronic board E850S.

2.2 UNAUTHORISED USE

- Uses other than the intended use are prohibited.
- It is prohibited to power the system with energy sources other than those specified.
- It is prohibited to integrate commercial systems and/or equipment other than those specified, or use them for purposes not envisaged and authorised by the corresponding manufacturers.
- It is prohibited to use and/or install accessories which have not been specifically approved by FAAC S.p.A.
- It is prohibited to use the automation before performing commissioning.
- It is prohibited to use the automation in the presence of faults which could compromise safety.
- It is prohibited to use the automation with the fixed and/or mobile guards removed or altered.
- Do not allow water jets of any type or size to come into direct contact with the gearmotor.
- Do not expose the gearmotor to corrosive chemical or atmospheric agents.
- Do not use the automation unless the area of operation is free of persons, animals or objects.
- Do not enter/remain in the area of operation of the automation while it is moving.
- Do not try to prevent the movement of the automation.
- Do not climb on, hold onto or let yourself be pulled by the leaf. Do not climb onto or sit on the gearmotor.
- Do not allow children to approach or play in the area of operation of the automation.
- Do not allow the control devices to be used by anyone who is not specifically authorised and trained to do so.
- Do not allow the control devices to be used by children or persons with mental and physical deficiencies unless they are supervised by an adult who is responsible for their safety.

2.3 TECHNICAL CHARACTERISTICS

The Kit E850S includes:

- the electronic board E850S for controlling the gearmotor C850
- a new support frame for the board E850S
- a new cable for connecting the integrated limit switches
- a new cable for connecting the electric motor

The electronic board E850S has an integrated:

- inverter for programming the opening and closing speeds independently
- fan for cooling the inverter
- LCD display and 2 buttons for programming the functions

2.4 COMPONENT IDENTIFICATION

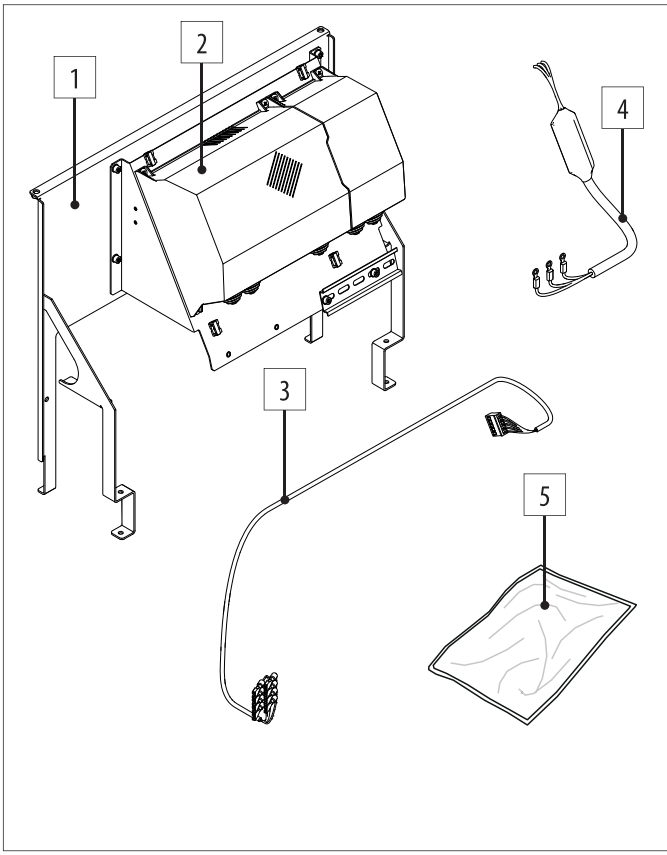

5 Components

1	New frame
2	Electronic board E850S with plastic covers
3	New cable for the integrated limit switches
4	New cable for the electric motor
5	Fasteners

BOARD E850S

COMPONENTS

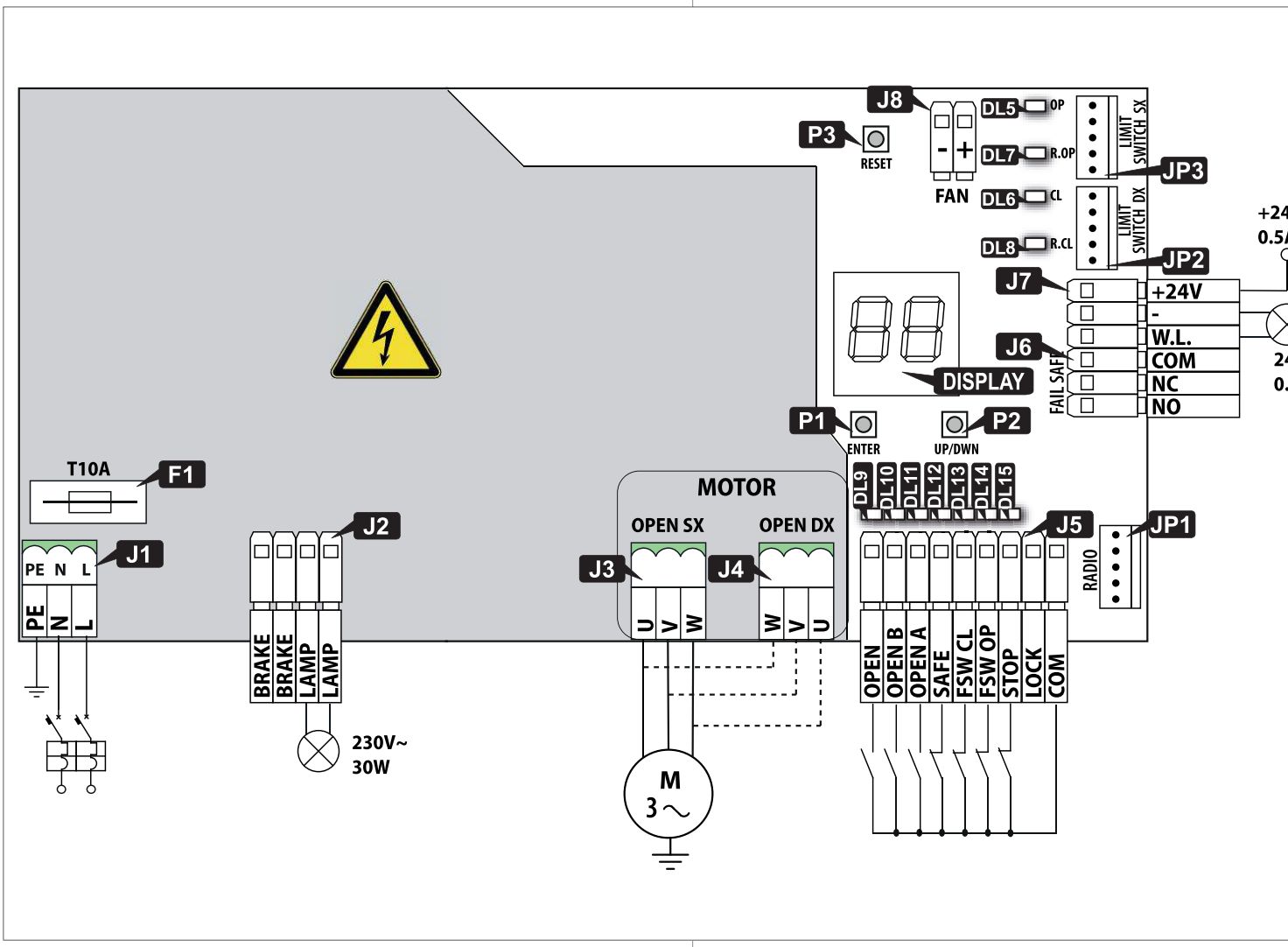

E850S	
J 1	Power supply terminal board
J 2	Electric brake and flashing light terminal board
J 3	Left opening motor terminal board
J 4	Right opening motor terminal board
J 5	Control devices terminal board
J 6	Failsafe terminal board
J 7	LED and accessories power supply terminal board
J 8	Cooling fan terminal board
JP 1	Connector (5 pin) for radio/decoder board
JP 2	Left opening limit switch connector
JP 3	Right opening limit switch connector
DISPLAY	Programming display
P 1	ENTER button
P 2	UP/DWN button
P 3	RESET button
F 1	Power supply fuse T10A
DL 5	Opening limit switch status LED
DL 6	Closing limit switch status LED
DL 7	Opening deceleration status LED
DL 8	Closing deceleration status LED
DL 9	OPEN input status LED
DL 10	OPEN B input status LED
DL 11	OPEN A input status LED

6 Board technical data E850S

Power supply voltage	230 V~(+6% -10%)
Max power	18 W
Accessories output voltage	24 V
Max. motor power	1.5 KW
Max. accessories load	500 mA
Max. flashing light load	30 W (230 V~)
Ambient operating temperature	-20 °C - +55 °C

3. PRELIMINARY OPERATIONS

RISKS

PERSONAL PROTECTIVE EQUIPMENT

Always shut off the power supply before performing any work. If the disconnect switch is not in view, apply a warning sign stating "WARNING - Maintenance in Progress".

3.1 REMOVING THE COVER

1. Unscrew the 4 screws and remove the cover (✎ **3**).
2. Put the cover and the 4 screws to one side.

3.2 DISCONNECTING THE ELECTRONIC BOARD E850

1. Disconnect the power supply and earth wires from the C850 (✎ **4**-1).
2. Unscrew the screws of the plastic cover of the E850 board. Remove the plastic cover. (✎ **5**).
3. Disconnect the limit switch cable from the E850 board. Remove the limit switch cable from the conduit (✎ **6**).
4. Unscrew the 4 screws of the electric motor junction box and remove the cover (✎ **7**-1). Put the screws and cover to one side.
5. Remove the 3 nuts that connect the cable lugs of the electric motor (✎ **7**-2). Put the nuts to one side.
6. Unscrew the electric motor cable gland (✎ **7**-3). Remove the electric motor cable from the cable gland (✎ **7**-4).
7. Disconnect the remaining wires from the electronic board E850. Remove the wires from the conduits.

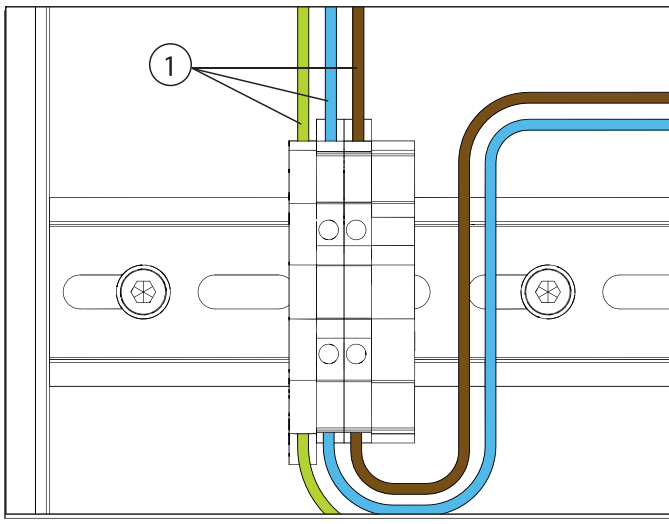

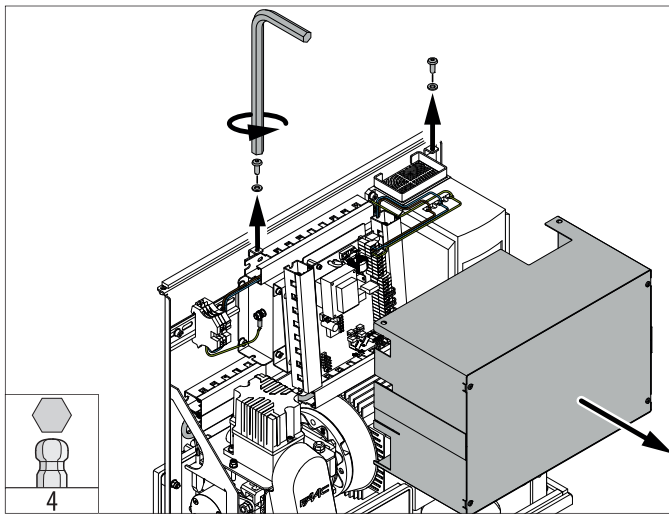

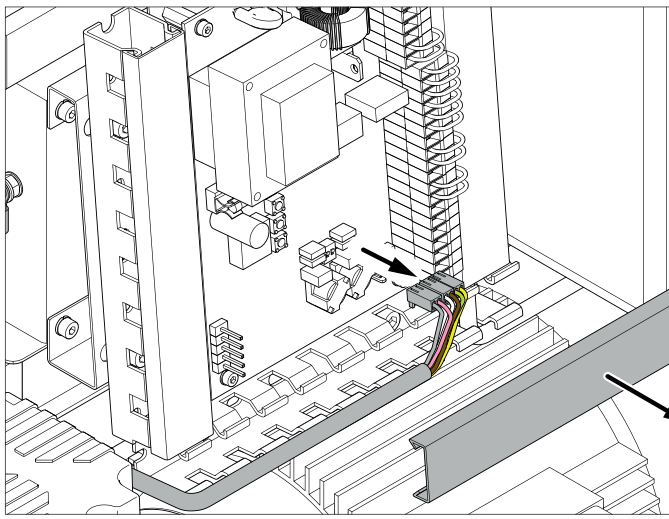

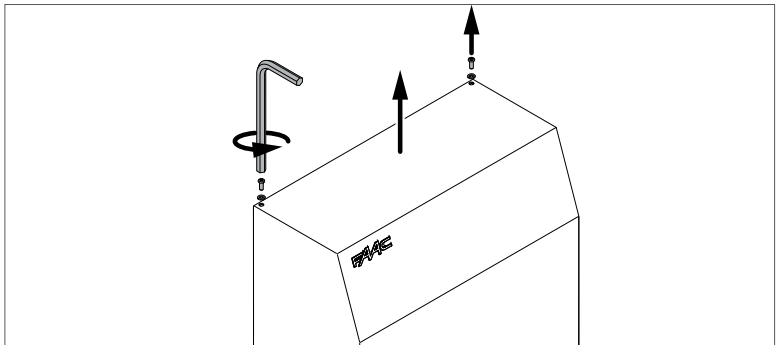

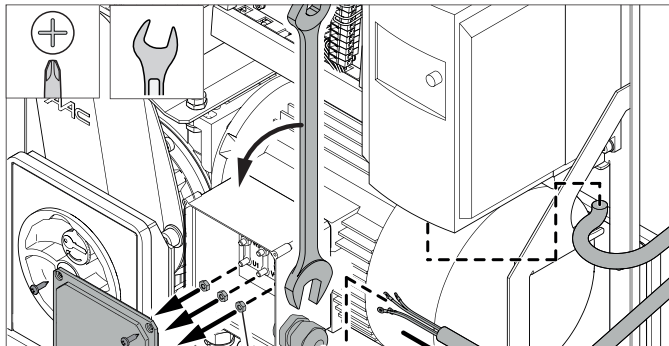

3.3 REMOVING THE ORIGINAL FRAME

1. Unscrew the 2 screws and 2 nuts that fasten the frame to the base of the operator (✎**8**-✎**9**).
2. Remove the frame from the base of the operator (✎**10**).

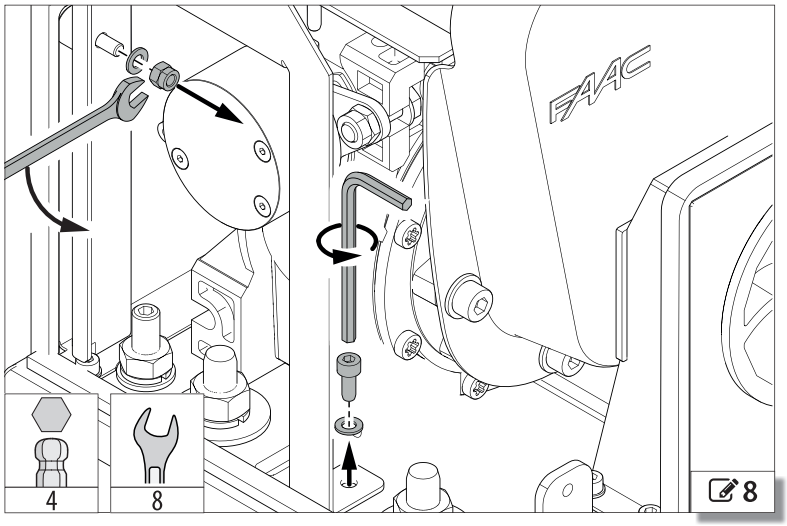

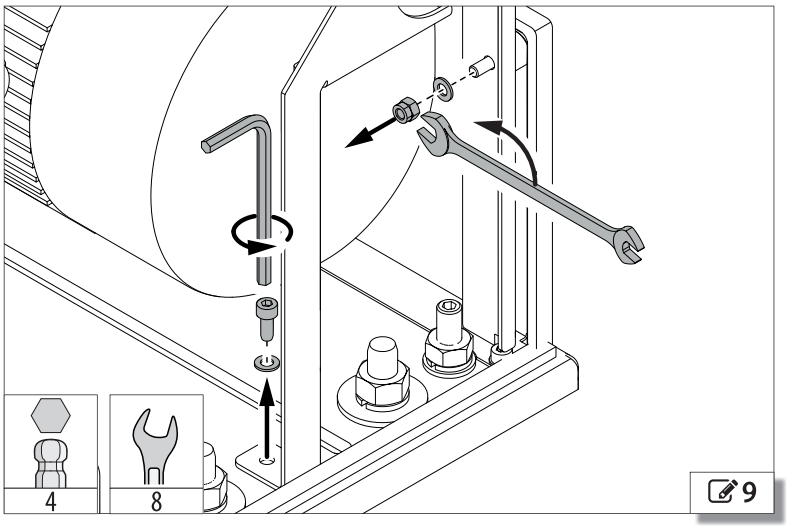

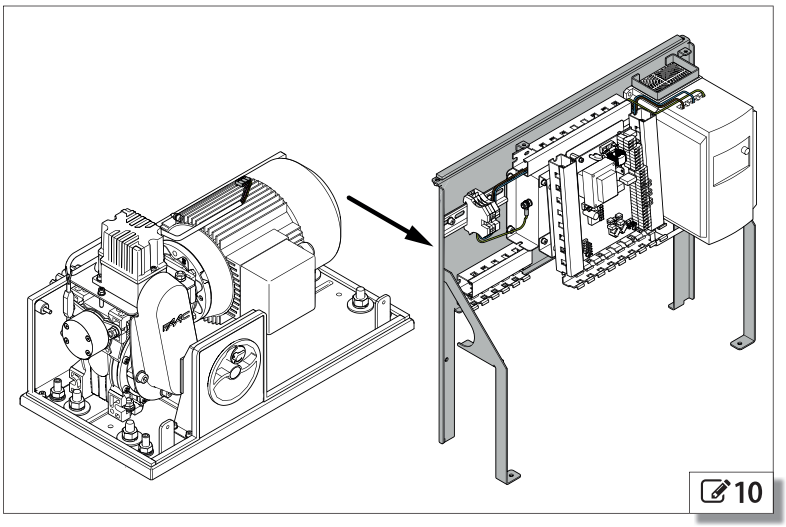

3.4 DISCONNECT THE LIMIT SWITCHES

1. Unscrew the 2 screws of the limit switch unit cover Re cover (✎**11**-1). Put the cover and screws to one side.
2. Unscrew the cable gland from the limit switch unit (✎
3. Disconnect the cable lugs from the micro switches an the limit switch cable from the cable gland (✎**11**-3).

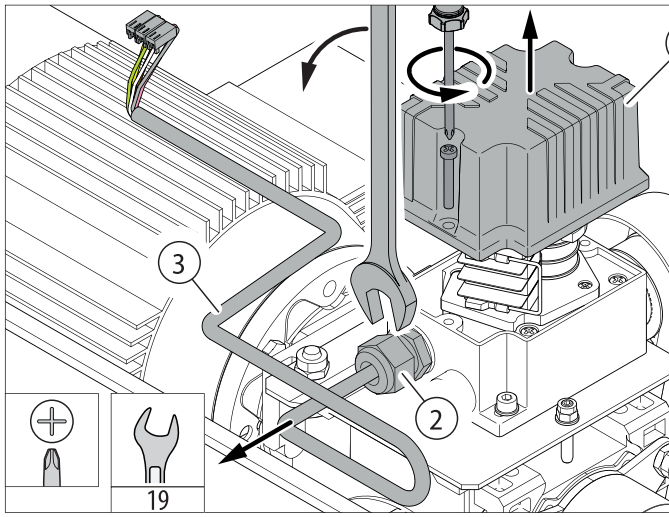

4. INSTALLATION

RISKS

PERSONAL PROTECTIVE EQUIPMENT

4.1 CONNECTING THE NEW LIMIT SWITCH CABLE

1. Take the cable gland seal from the Kit as shown in ✎12-1.
2. Take the new limit switch cable included in the Kit. Make a hole in the cable gland seal. Insert the cable lugs into the cable gland seal in the direction shown in ✎12-2.
3. Slide the cable gland seal along the limit switch cable.
4. Insert the cable lugs into the cable gland of the limit switch unit. (✎13).
5. Connect the cable lugs to the micro limit switches. Follow the colour scheme indicated in ✎14.
6. Tighten the limit switch unit cable gland (✎15).

4.2 CONNECTING THE NEW ELECTRIC MOTOR CABLE

1. Take the new electric motor cable included in the Kit.
2. Insert the ring cable lugs into the electric motor cable gland (✎16).
3. Connect the ring cable lugs to the electric motor as follows:

U1	Grey/Black
V1	Blue
W1	Brown

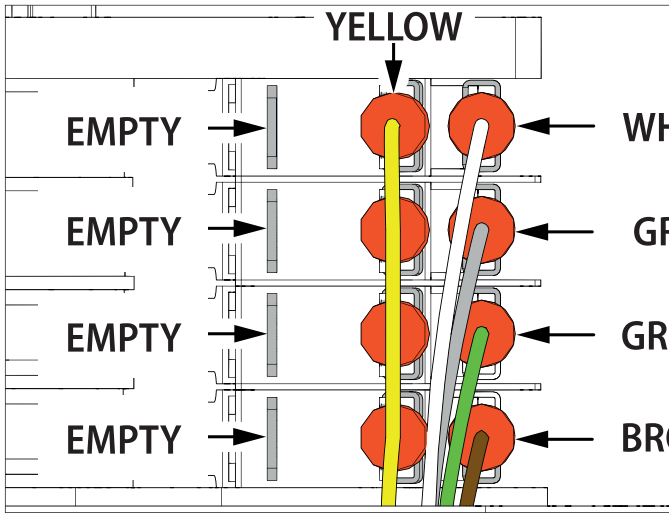

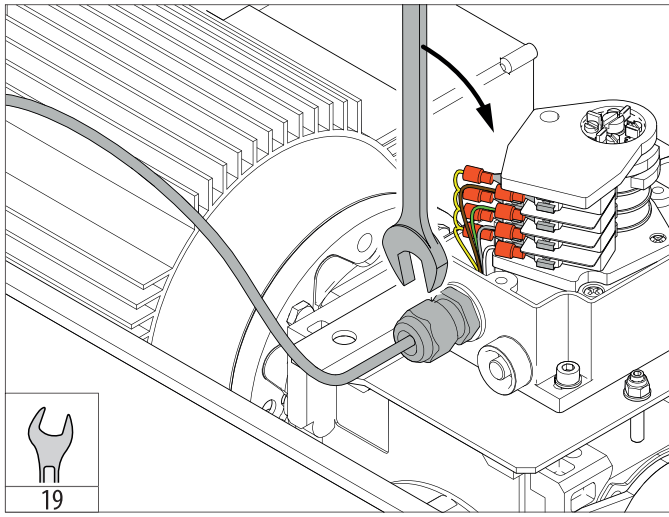

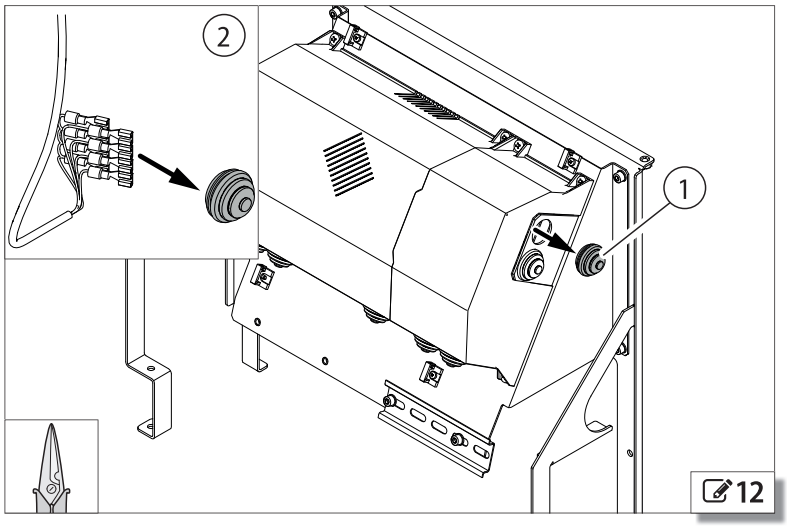

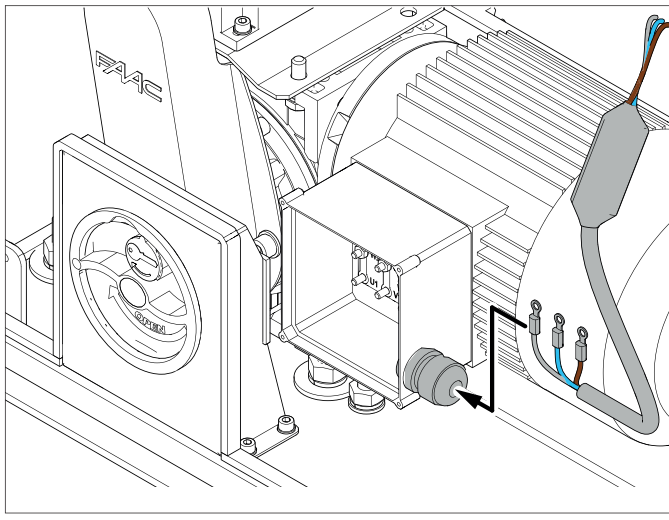

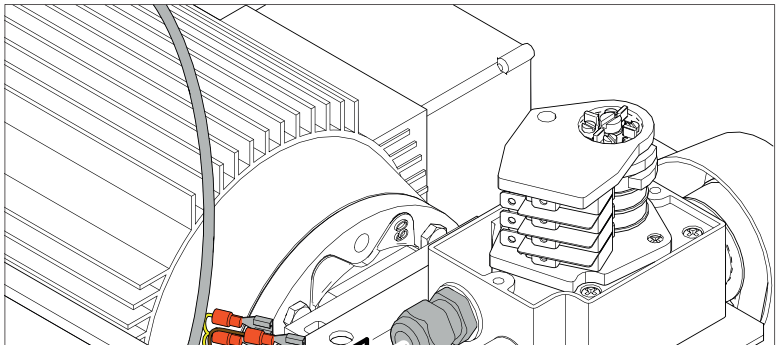

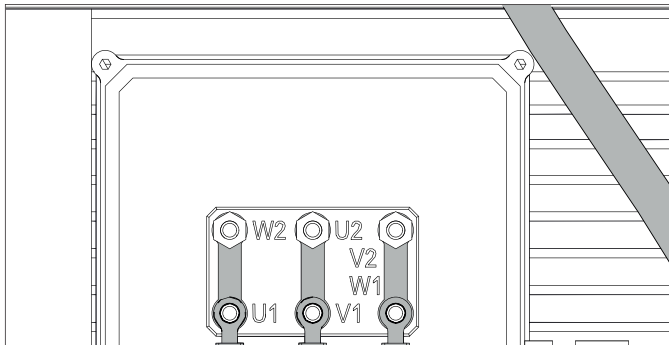

4. Tighten the 3 nuts that had been put aside previously onto the ring cable lugs (✎**18**-1).
5. Tighten the electric motor cable gland (✎**18**-2).
6. Place the cover on the electric motor junction box. Tighten the 4 screws of the cover that had been put aside previously (✎**18**-3).

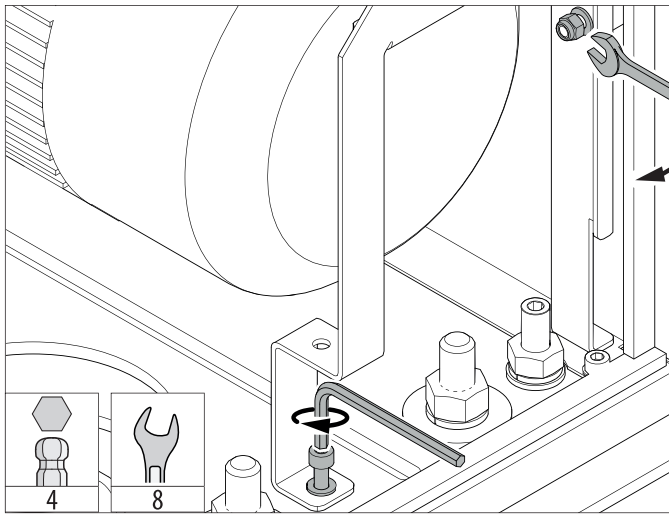

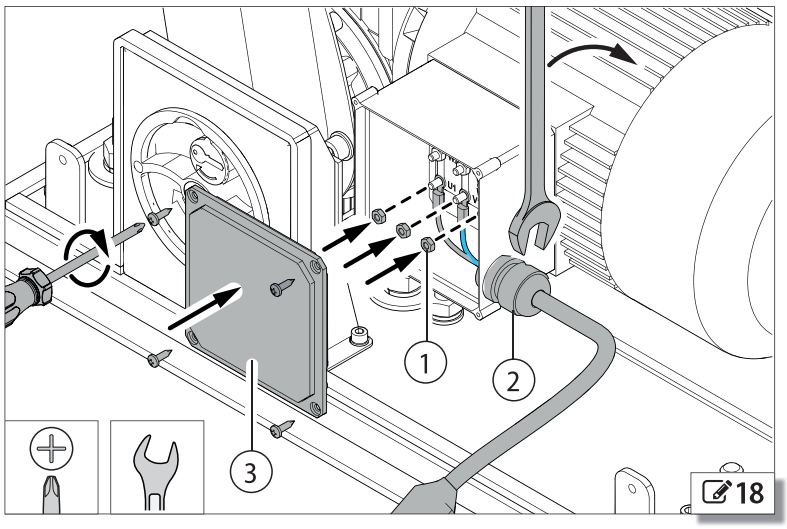

4.3 INSTALLING THE NEW FRAME

1. Place the new frame on the base in the same position as the old frame ✎**19**).
2. Fasten the new frame using the 2 nuts, the 2 screws and the 4 washers included in the Kit (✎**20**-✎**21**)

4.4 REMOVING THE PLASTIC COVERS

1. Unscrew the 7 fixing screws from the plastic covers of t board. Remove the plastic covers (✎**22**).
2. Put the plastic covers and fixing screws to one side.

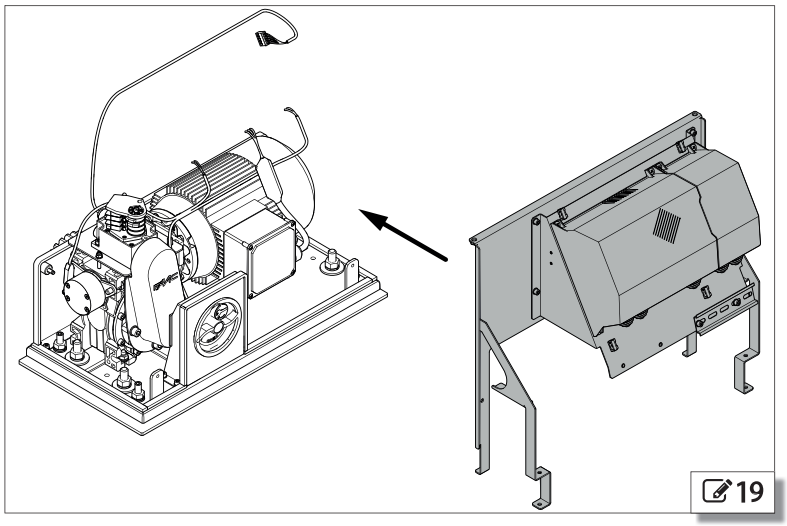

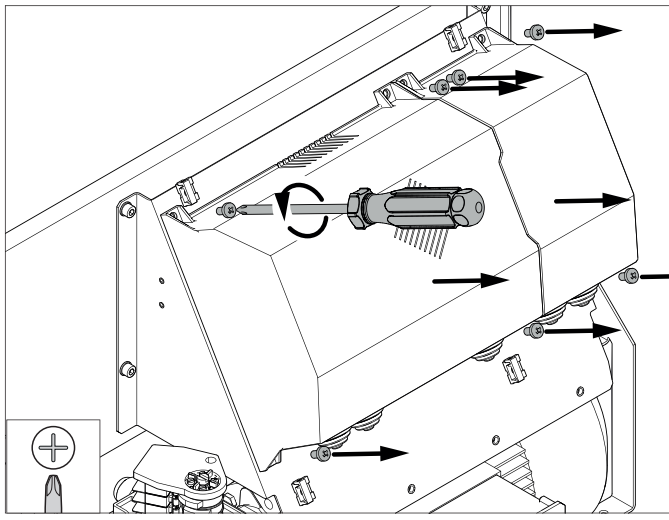

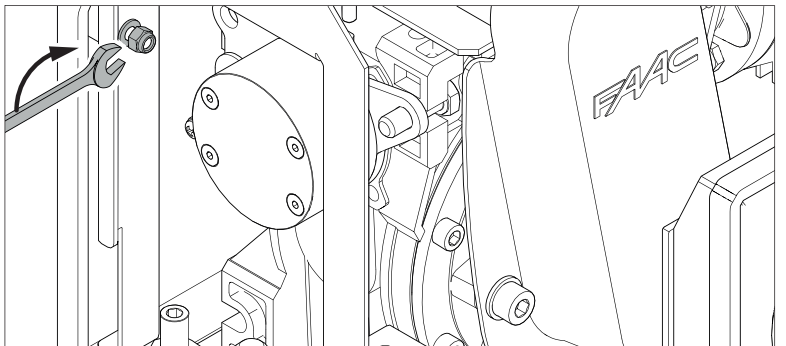

4.5 CONNECTIONS TO THE BOARD E850S

LIMIT SWITCHES

1. Fasten the limit switch cable to the cable clips on the frame (✎ **23**-1).
2. Insert the limit switch cable and the cable gland seal into the hole indicated in ✎ **23**-2.
3. Depending on the direction in which the gate opens, plug the limit switch connector into:
   - JP3 if the gate opens towards the left (✎ **24**)
   - JP2 if the gate opens towards the right (✎ **25**)

The direction in which the gate opens refers to when looking at the gate while standing in front of the C850 (✎ **26**,✎ **27**).

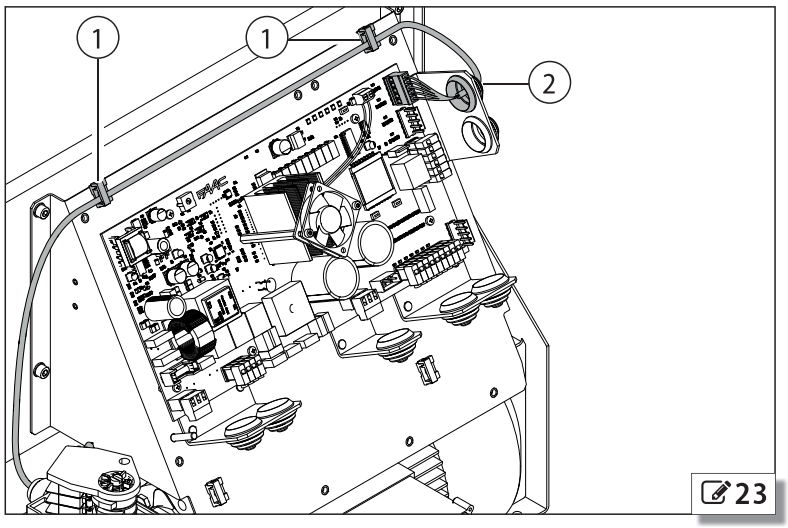

✎ **23**

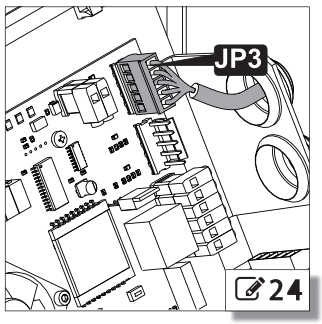

✎ **24**

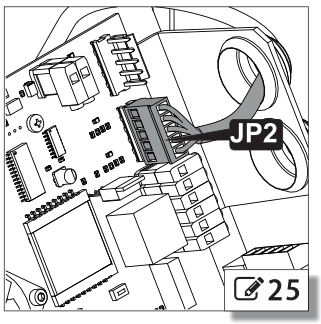

✎ **25**

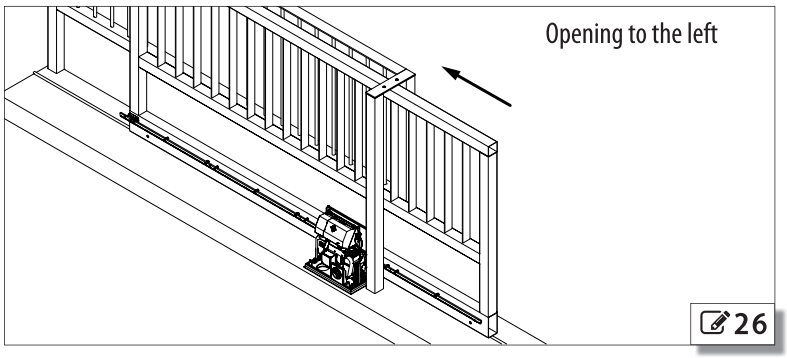

✎ **26**

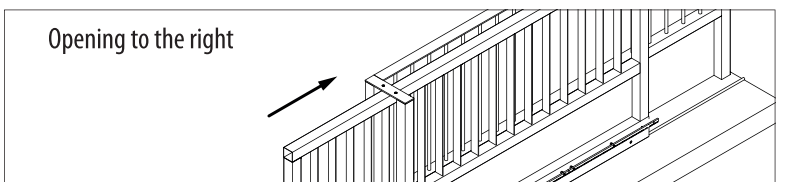

ELECTRIC BRAKE

1. Fasten the electric brake cable to the cable clip on t (✎ **28**-1).
2. Make a hole in the cable gland seal. Insert the elect cable into the cable gland seal (✎ **28**-2).
3. Connect the 2 wires of the electric brake to the BRAKE of J2 (✎ **28**-3).

The electric brake connection has no polarity.

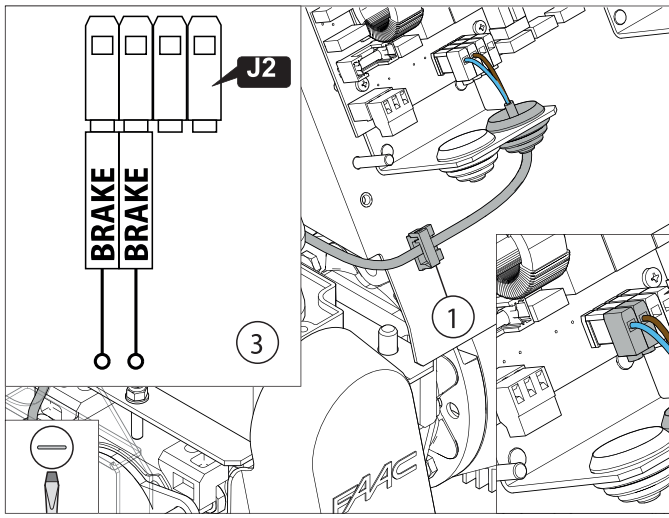

SAFETY SWITCH ON RELEASE DEVICE

1. Fasten the safety switch cable to the cable clips on t (✎ **29**-1).
2. Make a hole in the cable gland seal. Insert the safety sw into the cable gland seal (✎ **29**-2).
3. Connect the 2 wires of the safety switch to the LOCK terminals of J5 (✎ **30**).

The safety switch connection has no polarity.

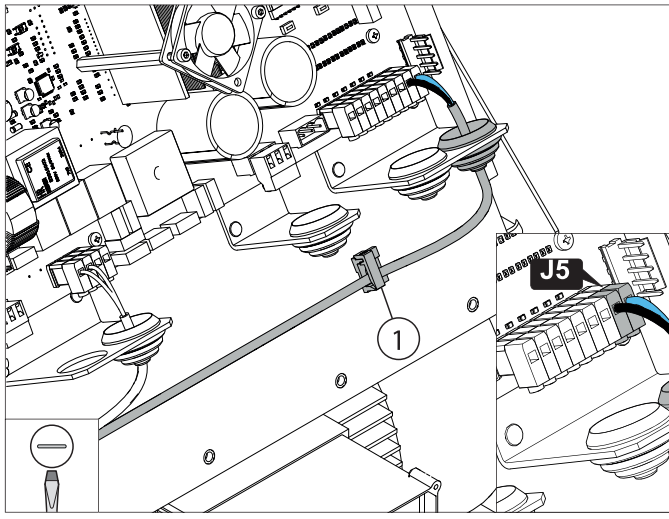

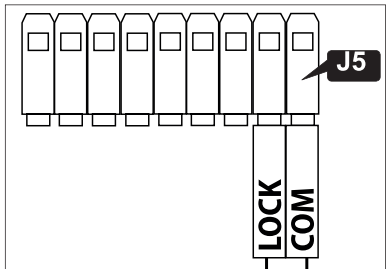

ELECTRIC MOTOR

1. Make a hole in the cable gland seal. Insert the electric motor cable into the cable gland seal (✎31-1).
2. Remove the three-pole terminal from J3 or J4.
3. Connect the wires of the motor to the three-pole terminal following the colours indicated in ✎31.
4. Plug the wired three-pole terminal wired into:
   - J3 if the gate opens towards the left
   - J4 if the gate opens towards the right

The direction in which the gate opens refers to when looking at the gate while standing in front of the C850.

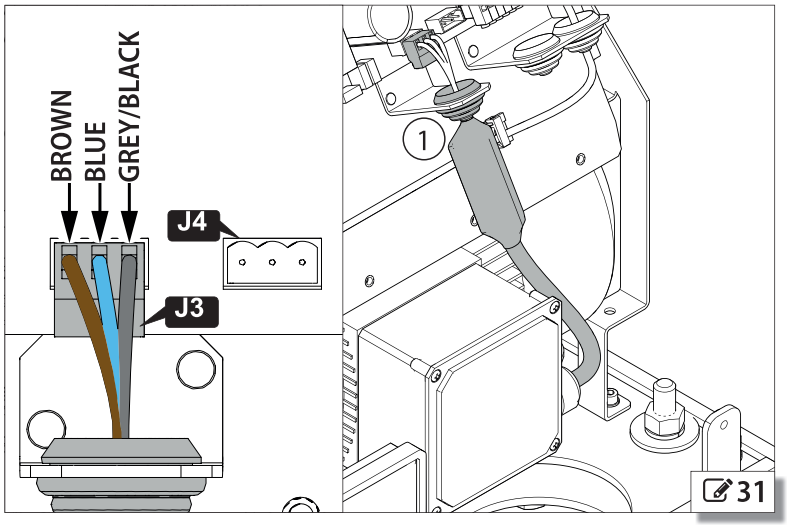

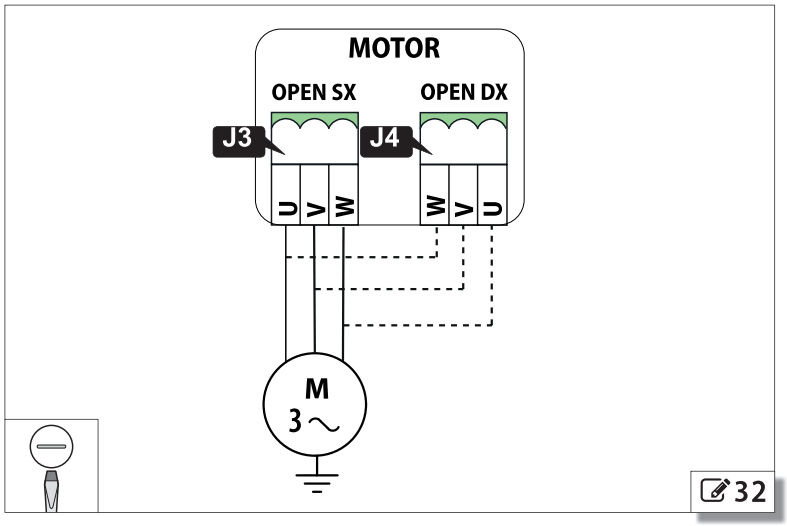

FLASHING LIGHT

Insert the cable of the flashing light into the cable gland seal indicated in ✎33. Connect the flashing light (230 V~, max 30 W model), to the LAMP terminals of J2 (✎34).

COOLING FAN

The board cooling fan is connected at the factory to J8 (✎35).

The fan is powered by a DC voltage. The connection is therefore polarised.

RADIO RECEIVER/DECODER BOARD

The quick insertion connector JP1 is specifically for 5-pin FA or decoder boards.

It is a polarised type of connector (✎36).

If a FAAC model RP receiver is used, it is recommended to i appropriate external antenna in order to obtain a sufficient

LED

The LED remotely indicates the status of the gate as follow

gate status	LED status
closed	off
opening	on
open	on
closing	flashing

Insert the cable of the LED into the cable gland seal inc ✎37. Connect the LED (model 24 V⎓ , maximum 0.2 W.L. and - terminals of J7 (✎38).

ACCESSORIES POWER SUPPLY

The E850S supplies 24 V⎓ max. 0.5 A for the connected ac on the +24V and - terminals of J7 ().

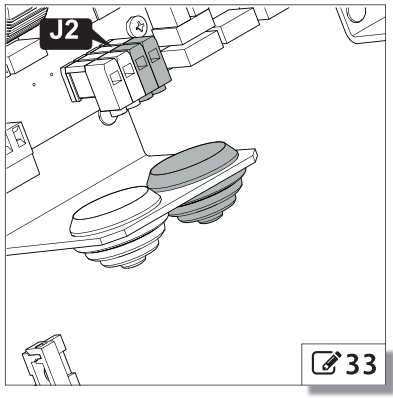

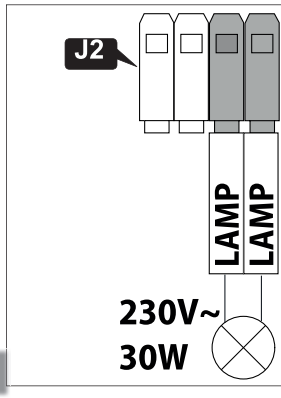

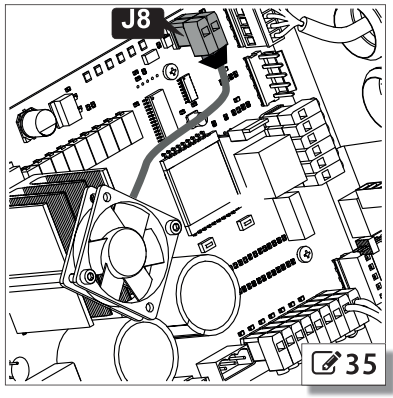

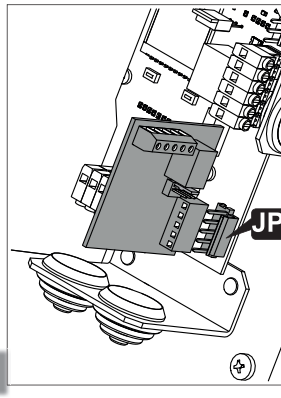

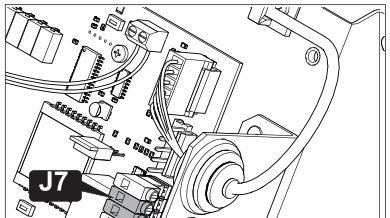

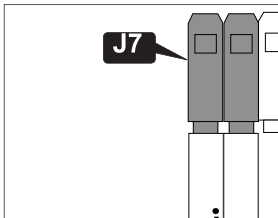

CONTROL DEVICES

Connect the devices to terminal board J5.

Multiple NO contacts on same input must be connected in parallel.
Multiple NC contacts on same input must be connected in series.

TERMINAL BOARD J5

OPEN	NO contact, connect a push-button or another type of pulse generator which, by closing a contact, commands only the total opening of the automation.
OPEN B	NO contact, connect a push-button or another type of pulse generator which, by closing a contact, commands only the partial opening of the gate. Can be configured as CLOSE by setting programming parameter A=1; in this case it becomes a NO contact to which to connect a push-button or another type of pulse generator which, by closing a contact, commands only the closing of the automation.
OPEN A	NO contact, connect a push-button or another type of pulse generator which, by closing a contact, commands the total opening of the gate. The effect that subsequent pulses have depends on programming parameter d.
SAFE	NC contact, connect a safety edge or other safety device which, by opening a contact, causes the gate to reverse slightly before stopping the automation. Active during both opening and closing.
FSW CL	NC contact, connect a photocell or another device which, by opening a contact during closing, causes the gate to reverse.
FSW OP	NC contact, connect a photocell or another device which, by opening a contact during opening, causes the gate to stop; when released, the gate continues to open.
STOP	NC contact, connect a push-button or another type of pulse generator which, by opening a contact, causes the automation to stop. The following cycle takes place slowly until the gate is completely open. If the input is not used, bridge it with COM INPUT.
LOCK	NC contact, used for connecting the safety switch on the release device at the factory.
COM INPUT	Common contacts

If one or more SAFE, FSW CL, FSW OP inputs are not used:
- With Failsafe disabled: bridge the input with COM INPUT
- With Failsafe enabled: see below

FAILSAFE

The failsafe is a test to check the operation of the safety devices connected to the inputs SAFE, FSW CL, FSW OP. It consists of momentarily interrupting the power supply to the devices before any movement takes place and checking the change in status of the inputs.

In order for the test to be performed, it must be enabled (parameter b=I).

Terminal board J6 (✎ 39) provides a volt free contact (NO or NC) to be used to interrupt the power supply.

✎ 39 shows the connection of one pair and two pairs of photocells (connected in series). In this configuration, if one or more of the SAFE, FSW CL, FSW OP inputs are not used, bridge them with NC of J6.

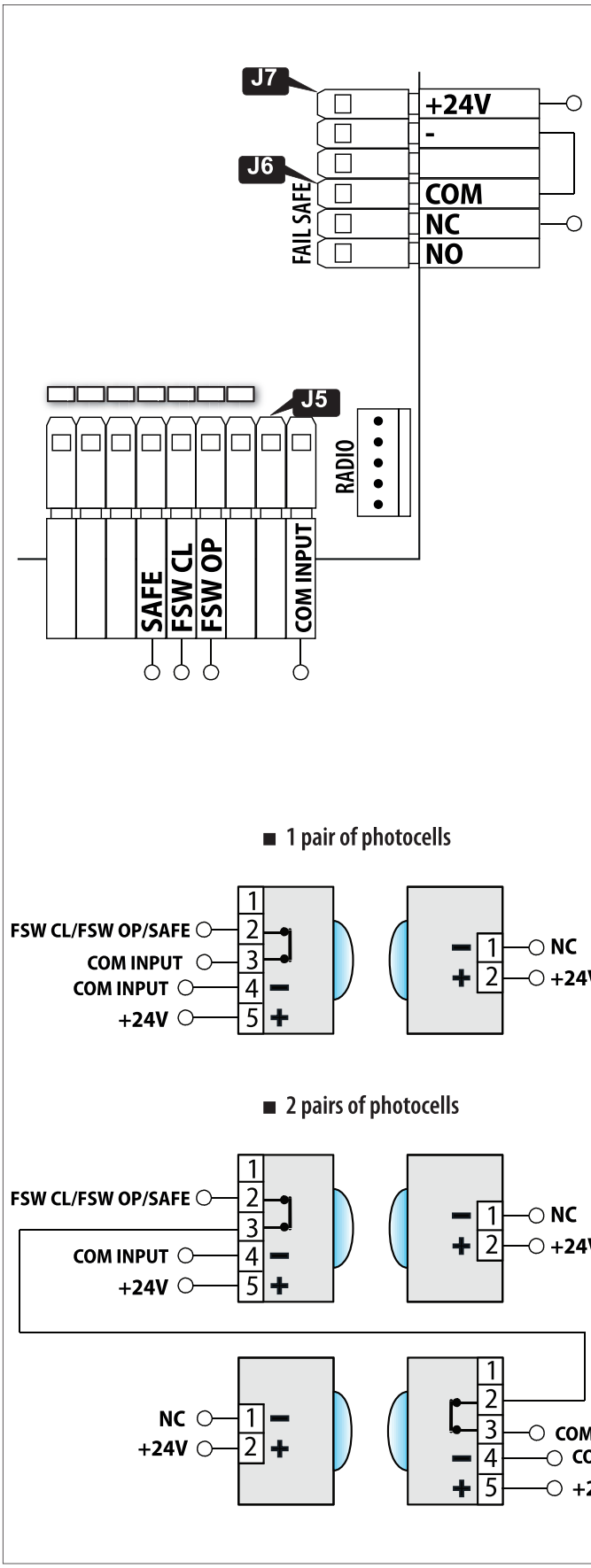

POWER SUPPLY AND GROUNDING

Carry out the following operations with the power supply disconnected.

1. Crimp the system earth wire, using the supplied terminal.
2. Install the M5 nut, washer and terminal supplied onto the gear motor earth connection (✎ **40**-1). Tighten the nut.
3. Connect the phase and neutral wires of the power supply to terminals L and N respectively of J1 (✎ **40**).

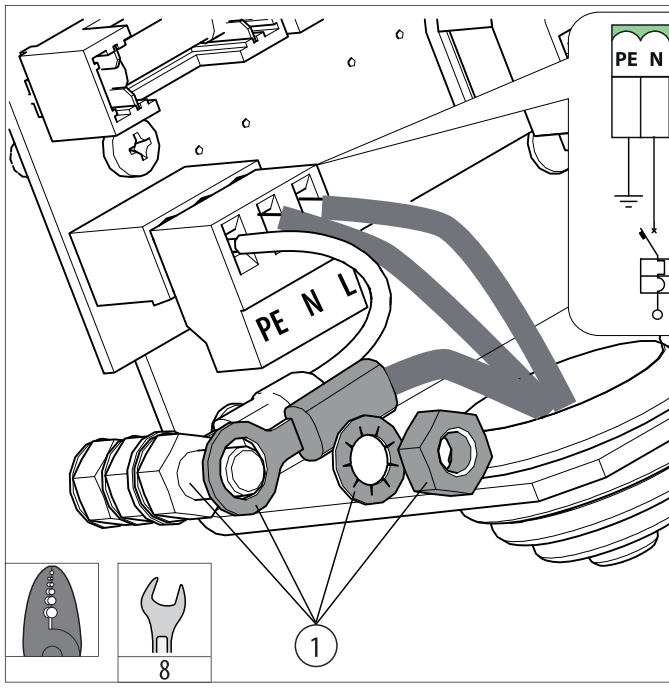

5. START-UP

RISKS

PERSONAL PROTECTIVE EQUIPMENT

During operation there is a risk of fingers and hands being trapped between the rack, pinion and cover.

If the gate is not engaging a limit switch, any movement following a start or reset during opening takes place at a slow speed until it reaches the limit switch.

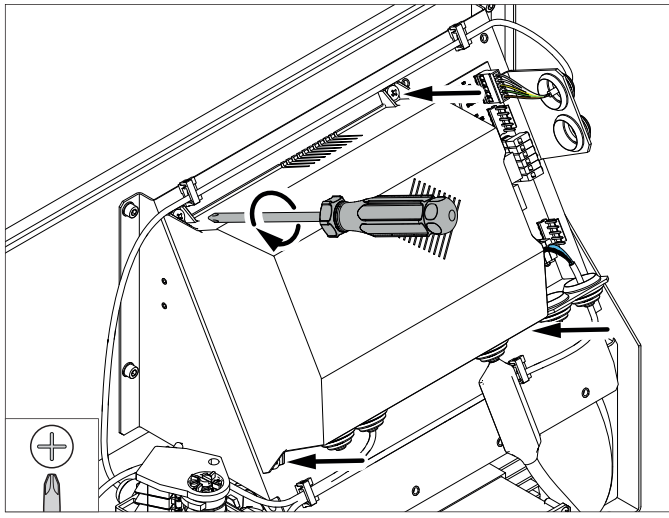

1. Make sure that the motor and limit switch cables are plugged into the correct connectors, according to the direction in which the gate opens.
2. Install the high voltage protection cover on the board E850S and fasten it in place using the 4 screws that were put aside previously (✎ **41**).
3. Make sure that the C850 has been released (§ 5.1).
4. Power up the system.
5. Adjust the integrated limit switches (§ 5.2).
6. Programming the E850S board (§ 5.3)
7. Restore automatic operation (§ 5.1).
8. Carry out the procedure for putting the system into service (§ 6).

5.1 MANUAL OPERATION

Before performing the release operation, shut off the power supply to the automation.

During manual operation, gently guide the leaf the whole way. Do not push it and let it slide freely.

Do not leave the gate with the release engaged: after moving it manually, restore automatic operation.

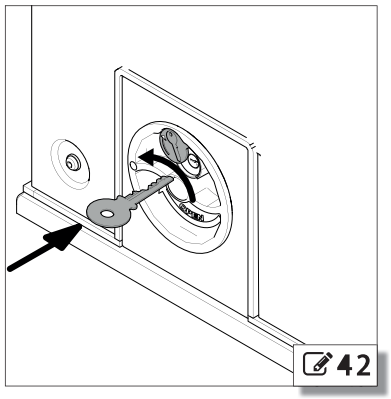

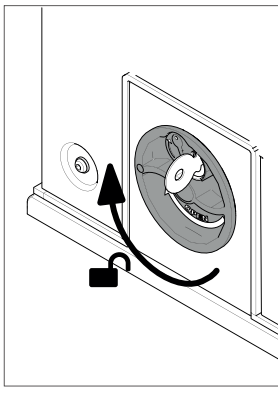

RELEASE PROCEDURE

1. Turn the lock protection shutter clockwise
2. Insert the release key and rotate it anticlockwise by a quarter of a turn
3. Turn the release knob clockwise until it stops

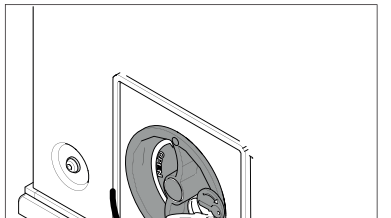

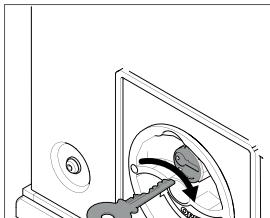

RESTORING AUTOMATIC OPERATION

1. Turn the release knob anticlockwise until it stops
2. Turn the release key clockwise until it stops, then remove it

5.2 LIMIT SWITCH ADJUSTMENT

C850 must be released.

The deceleration starting points and stop points are set by adjusting the integrated limit switches. The maximum deceleration space that can be set is 5 m. The minimum deceleration space depends on the programmed speed (parameters L. and .L):

7 Minimum deceleration spaces

L0	minimum distance from the stop point: 10 cm
L1	minimum distance from the stop point: 40 cm
L2	minimum distance from the stop point: 70 cm
L3	minimum distance from the stop point: 130 cm

Failure to comply with the minimum distances indicated in **7** can jeopardise the integrity and operation of the C850 and be a potential safety hazard.

Loosen the central screw of the limit switch unit by one turn (**46**).

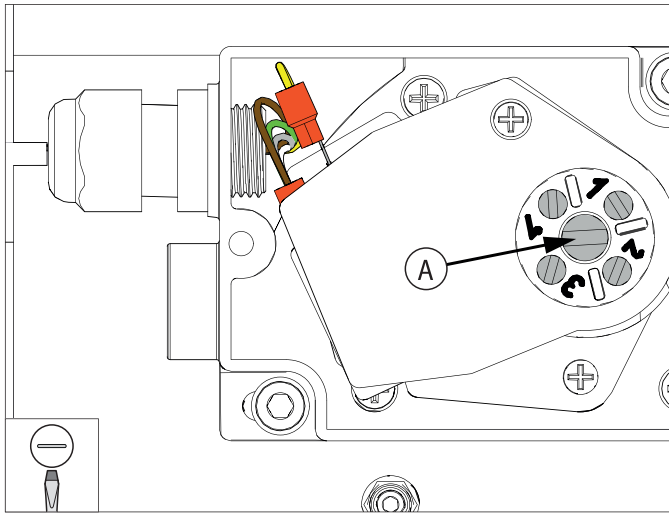

OPENING TO THE LEFT

8 Opening to the left

function	cam to be adjusted	direction of adjustment
closing	cam 3	↺
closing deceleration	cam 4	↺
opening deceleration	cam 1	↻
opening	cam 2	↻

1. Close the gate as far as the required closed position. The closed position must be at least 10 cm from the external mechanical stop.
2. Using a screwdriver, turn screw number 3 anticlockwise until the cam engages the micro switch, as shown in **47**. When the micro switch is activated, the LED DL6 (CL) turns off.
3. Open the gate as far as the closing deceleration starting point.
4. Using a screwdriver, turn screw number 4 anticlockwise until the cam engages the micro switch as shown in **48** When the micro switch is activated, the LED DL8 (R.CL) turns off.
5. Open the gate as far as the required opening deceleration starting point.
6. Using a screwdriver, turn screw number 1 clockwise until the cam engages the micro switch, as shown in **49**. When the micro switch is activated, the LED DL7 (R.OP) turns off.
7. Open the gate as far as the required open position. The open position must be at least 10 cm from the external mechanical stop.
8. Using a screwdriver, turn screw number 2 clockwise until the cam engages the micro switch, as shown in **50**. When the micro switch is activated, the LED DL5 (OP) turns off.

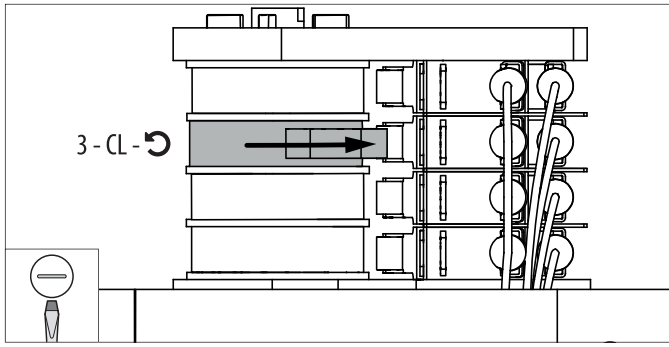

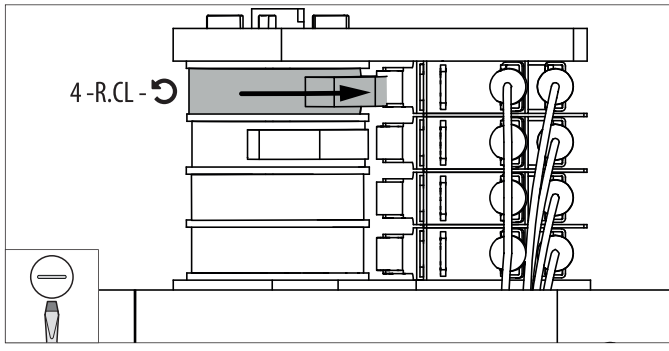

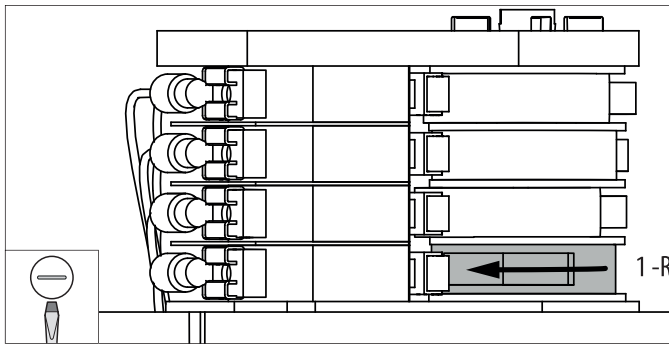

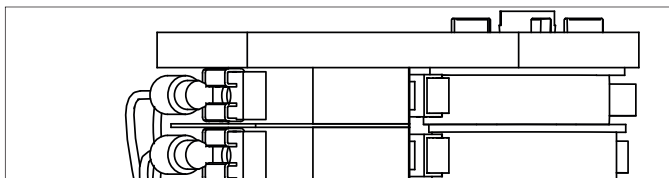

OPENING TO THE RIGHT

9 Opening to the right

function	cam to be adjusted	direction of adjustment
closing	cam 2	↻
closing deceleration	cam 1	↻
opening deceleration	cam 4	↺
opening	cam 3	↺

1. Close the gate as far as the required closed position. The closed position must be at least 10 cm from the external mechanical stop.
2. Using a screwdriver, turn screw number 2 clockwise until the cam engages the micro switch, as shown in ✎ **51**. When the micro switch is activated, the LED DL6 (CL) turns off.
3. Open the gate as far as the required closing deceleration starting point.
4. Using a screwdriver, turn screw number 1 clockwise until the cam engages the micro switch, as shown in ✎ **52** When the micro switch is activated, the LED DL8 (R.CL) turns off.
5. Open the gate as far as the opening deceleration starting point.
6. Using a screwdriver turn screw number 4 anticlockwise until the cam engages the micro switch, as shown in ✎ **53**. When the micro switch is activated, the LED DL7 (R.OP) turns off.
7. Open the gate as far as the required open position. The open position must be at least 10 cm from the external mechanical stop.
8. Using a screwdriver turn screw number 3 anticlockwise until the cam engages the micro switch, as shown in ✎ **54**. When the micro switch is activated, the LED DL5 (OP) turns off.

⚠ Tighten the central screw of the limit switch unit by one turn (✎ **55**).

Replace the cover of the limit switch unit using the screws that were put aside previously (✎ **56**).

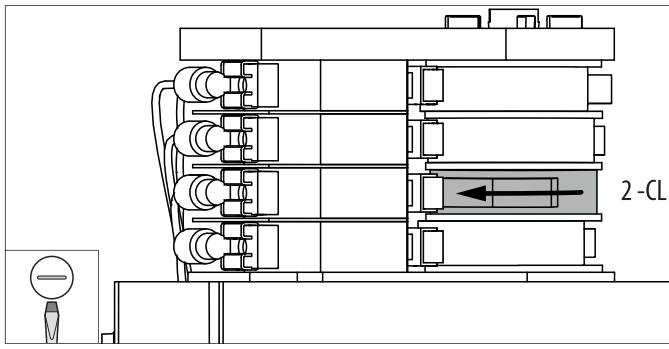

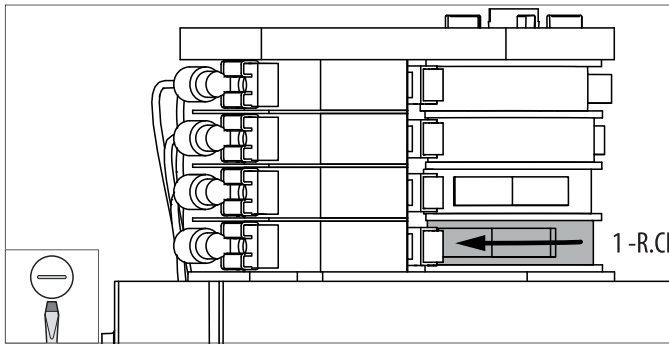

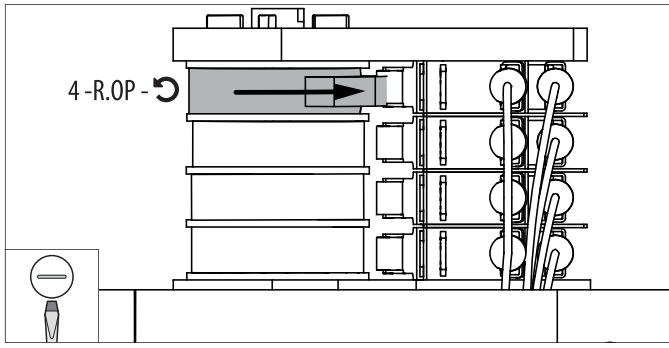

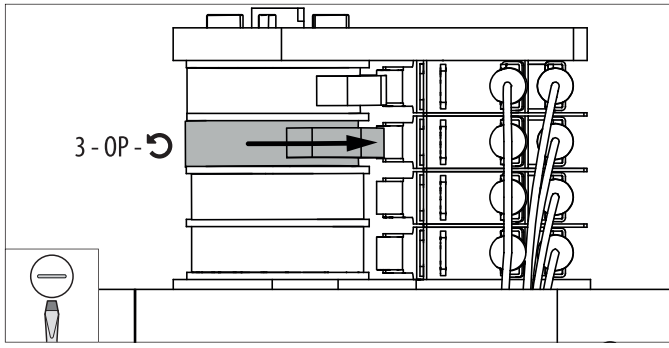

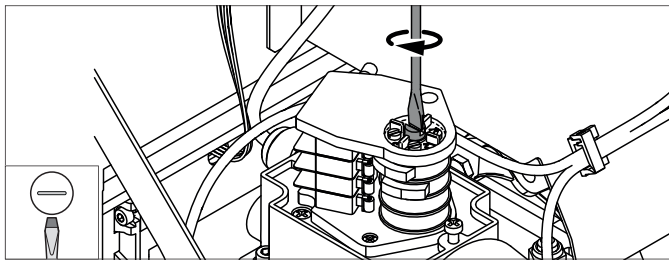

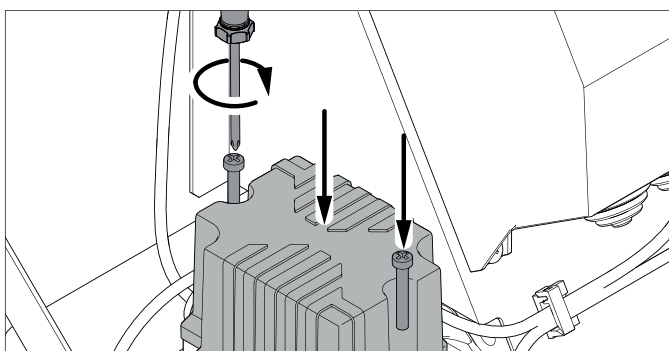

5.3 PROGRAMMING

To access the programming menu, the display must indicate the gate closed status (00).

To access the programming mode from whichever state the gate is in, press and release the RESET button: 00 appears on the display.

Press button P1 (ENTER), for approximately 5 seconds, until the first parameter A appears.

Press button P2 (UP/DWN) to modify the value of the parameter.

Press button P1 (ENTER) to go to the next parameter.

After 60 seconds of inactivity, the system will automatically exit from the programming menu saving any changes that were made.

parameter		default
A	**OPEN B input configuration** 0 partial opening only 1 closes only (CLOSE)	0
b	**Failsafe** 0 not enabled 1 enabled	0
c	**Automatic closing** 0 not enabled 1 enabled, pause 5 s 2 enabled, pause 10 s 3 enabled, pause 15 s 4 enabled, pause 20 s 5 enabled, pause 25 s 6 enabled, pause 30 s 7 enabled, pause 40 s 8 enabled, pause 80 s 9 enabled, pause 120 s	0
d	**OPEN A operation** 0 open/stop/close/open... 1 open/close/open..."	0
E	**Partial opening time** 0 3 s 1 5 s 2 8 s 3 10 s	0
H	**Condominium function** 0 not enabled (the OPEN A command is operative during opening) 1 enabled (the OPEN command is ignored during opening)	0
L.	**Maximum opening speed** 0 10 m/min 1 20 m/min 2 30 m/min 3 40 m/min	0
.L	**Maximum closing speed** 0 10 m/min 1 20 m/min 2 30 m/min 3 40 m/min	0
o	**Immediate closure after transit across photocells** 0 not enabled (with automatic closing enabled, the gate always closes after the pause time)	0

parameter	
P	**Timer function** 0 not enabled 1 enabled (the OPEN A maintained action control keeps the g open until released)
U	**Dead-man function** 0 not enabled 1 enabled (requires the OPEN A and CLOSE maintained act controls to be used)

In the dead-man mode:

- The control must be activated intentionally and th gate must be visible
- The OPEN input is disabled.
- If the SAFE input is activated during opening closing, it stops the movement immediately.
- If the FSW CL input is activated during closing, stops the movement.
- If the FSW OP input is activated during opening, stops the movement.
- the speed of the gate must be less than 5 m/min

y	**Pre-flashing during closing** 0 not enabled 1 1 s 2 2 s 3 3 s 4 4 s

The display, other than when in the programming menu, information regarding the status of the automation (§ 7.2)

6. PUTTING INTO SERVICE

Carry out the following operations with the power supply disconnected.

Before installing the board cover and casing you must have:
- completed the start-up procedure
- checked that the C850and the installed devices are working properly.

1. Install the low voltage protection cover on the board E850S and fasten it in place using the 3 screws that were put aside previously (57).
2. Install the cover and fasten it using the 4 screws that were put aside previously (58).

6.1 FINAL CHECKS

1. Make sure that the forces generated by the leaf are within the limits permitted by the current regulations. Use an impact force tester in accordance with standards EN 12453 and EN 12445. For non-EU countries, of there are no specific local regulations, the force must be less than 150 N.
2. Check that the maximum force required to move the leaf by hand is less than 260 N.
3. Check that the C850 and the installed devices are working properly.

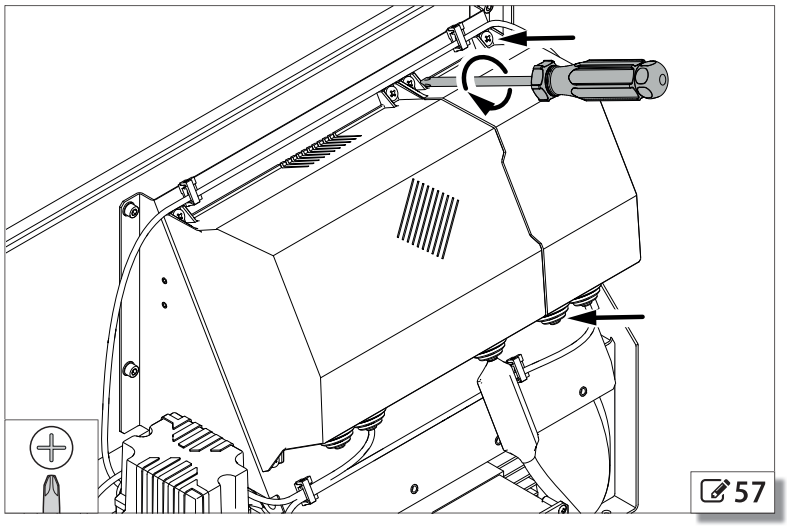

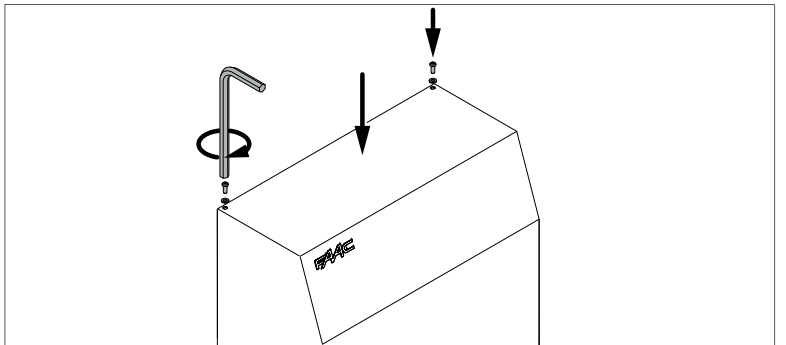

7. DIAGNOSTICS

7.1 LEDS CHECK

10 Status of the LEDs

LED	meaning	●	○
DL5 OP	opening limit switch	**not engaged**	en
DL6 OP	closing limit switch	**not engaged**	en
DL7 R.OP	deceleration during opening	**not engaged**	en
DL8 R.CL	deceleration during closing	**not engaged**	en
DL9 OPEN	OPEN input	active	**no**
DL10 OPEN B	OPEN B input	active	**no**
DL11 OPEN A	OPEN A input	active	**no**
DL12 SAFE	SAFE input	**not active**	ac
DL13 FSW CL	FSW CL input	**not active**	ac
DL14 FSW OP	FSW OP input	**not active**	ac
DL15 STOP	STOP input	**not active**	ac

Bold indicates the condition of the LEDs with the board pow
gate at its halfway position and no connected device active
; ○=off).

7.2 STATUS OF THE AUTOMATION

The display, other than when in the programming menu,
information regarding the status of the automation:

11 Status of the automation

display	meaning
00	gate closed
02	gate opening/open
04	gate open in pause
06	gate closing
ST	the dead-man function is active and the gate has n pleted the opening or closing cycle
ER	the failsafe function is active and the test has failed one device (the LAMP output flashes quickly at the s
.8.8	dot on the left lit FSW OP input active
.8.8	dot on the right lit FSW CL input active